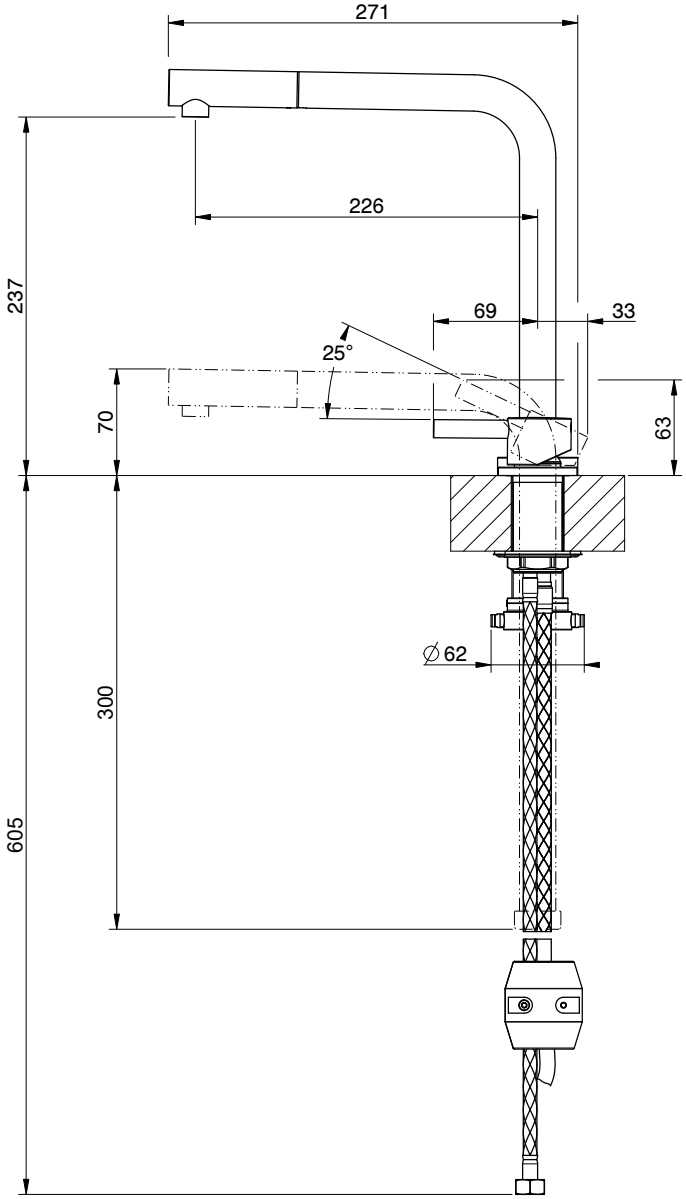

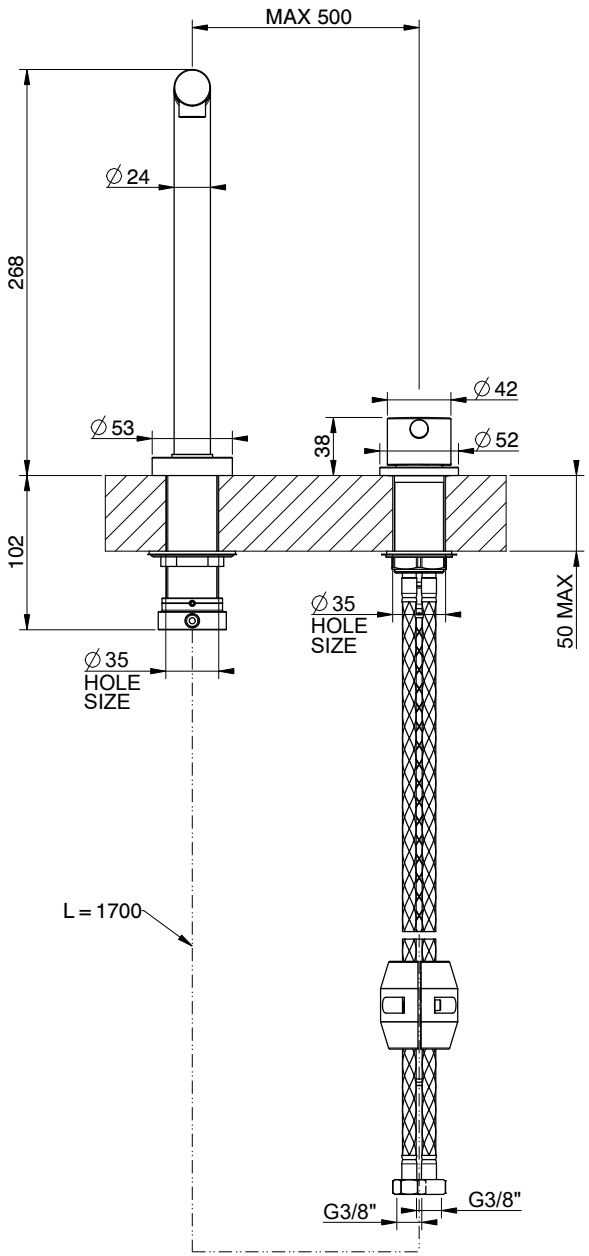

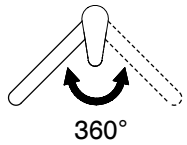

GESSI	**OXYGENE 50109**	Formato *A4*
	MISCELATORE LAVELLO COMANDO REMOTO ESTRAIBILE ABBATTIBILE DA PIANO	Dis.: GPF5010920000G000

Gessi S.p.A.Parco Gessi,13037 Serravalle Sesia (Vercelli) Italy Tel.0039 0163 454111 Fax.0039 0163 453150 www.gessi.com e-mail:gessi@gessi.it

This drawing by its legislation cannot be disclosed or reproduced without a written authorization released by GESSI S.p.A. - 2024 Copyright© GESSI S.p.A.